A new microcomputer-based laboratory version of the Rüchardt experiment for measuring the ratio $\gamma = C_p/C_v$ in air

Giacomo Torzo[a] and Giorgio Delfitto
Istituto Nazionale per la Fisica della Materia, Unità di Padova, Padova, Italy and Dipartimento di Fisica, Università di Padova, Padova, Italy

Barbara Pecori
Dipartimento di Fisica, Università di Bologna, Bologna, Italy

Pietro Scatturin
Dipartimento di Fisica, Università di Padova, Padova, Italy

(Received 10 January 2001; accepted 10 June 2001)

We describe a new version of the Rüchardt experiment in which we record the time evolution of temperature, pressure, and volume oscillating around an equilibrium value. We use a portable microcomputer-based laboratory made of a graphic calculator, an interface, two commercial sensors (sonar and barometric sensor), and a homemade temperature sensor. © *2001 American Association of Physics Teachers.*
[DOI: 10.1119/1.1405505]

I. INTRODUCTION

Experimental investigations of thermodynamic transformations at the introductory level have always been very limited because of the difficulties in performing simple, but conceptually relevant, lab experiments. Low-cost and user-friendly data acquisition systems have opened new possibilities in this field.

First the possibility of easily collecting measures of thermodynamic variables versus time, at high acquisition frequency with virtually no limits on the number of samples, allows a detailed description of what goes on during the investigated transformation. This may have important implications for student learning. A description of the phenomenon in terms of relevant variables versus time, more similar to their spontaneous description,[1] can be the first step toward mastering the time-independent description of the same phenomenon in terms of equilibrium states.

Second the possibility of easy data reduction allows this new description to be quickly obtained from experimental data, actually providing the students with a different ''view'' of the same experiment.

The present paper is aimed at offering an easy and cheap way to perform a famous and important experiment that is usually only described in textbooks, and rarely carried out in the laboratory: the Rüchardt experiment[2] where the ratio $\gamma = C_p/C_v$ of the specific heats of air is calculated from the period of the oscillations of a sphere supported by an ''air spring.'' The Rüchardt oscillations are indeed always described as *adiabatic* transformations in textbooks.[3] Are they really adiabatic?

A paper published in this Journal[4] reported an interesting effect that shows up when performing this experiment with a large buffer volume: a sudden drop of the damping coefficient and of the oscillation frequency, when the oscillation amplitude falls below a threshold value. The authors explain by a theoretical analysis based on the measured volume oscillations that this effect marks a transition from a *quasiadiabatic* to *quasi-isothermal* regime.

More recently a second paper[5] described a modified version of the same experiment where pressure is also measured, and where the volume changes ΔV can be related to the corresponding pressure changes ΔP, allowing an independent measurement of γ from the slope of the ΔP vs ΔV plot. These authors report that under ordinary conditions the transformation in air is *almost* adiabatic and that the slight departure from adiabatic conditions does not substantially affect the measured value of the γ coefficient.

Here we describe a completely new setup that offers a full description of the thermodynamic transformation by means of simultaneous measurements of volume, pressure, and *temperature* oscillations. The students may perform, on a single set of data, an analysis that proves that in this experiment the *adiabatic regime is well approximated*.

In Sec. II we briefly describe the original Rüchardt method and the approximations on which it is based. In Sec. III we describe both a first microcomputer-based laboratory (MBL) version of the Rüchardt apparatus and an improved version designed to be easily used in a classroom. In Sec. IV we discuss the experimental results and we try to answer the question about ''adiabatic versus isothermal regime.'' In Sec. V we illustrate the didactical value of this experiment; and in Sec. VI we draw some conclusions on the advantages of the technology used in this experiment. Details on the sensors used are presented in the Appendix.

II. THE RÜCHARDT DEVICE FOR MEASURING γ

Adiabatic transformations of a perfect gas, assuming a reversible[6] process, obey the Poisson equation

$$PV^{\gamma} = \text{const}, \tag{1}$$

where the coefficient γ is the ratio c_p/c_v between the constant pressure and the constant volume specific heats. Theory predicts for γ the value $\gamma = 1 + 2/j$, where j is the number of degrees of freedom of the particles constituting the investigated gas. For air, a mixture of mainly diatomic gases, $j = 5$ (3 translational and 2 rotational degrees of freedom) and therefore $\gamma = 7/5 = 1.4$.

Let us now describe the Rüchardt method and the approximations on which it is based. In the original version it involved a series of reversible adiabatic compressions and ex-

This article is copyrighted as indicated in the article. Reuse of AAPT content is subject to the terms at: http://scitation.aip.org/termsconditions. Downloaded to IP: 169.230.243.252 On: Sun, 22 Feb 2015 16:52:38

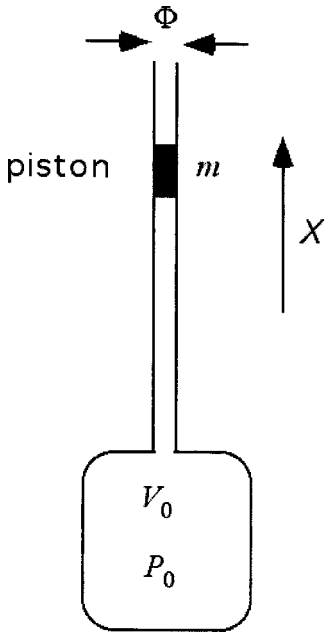

Fig. 1. Sketch of the Rüchardt apparatus.

pansions produced by a sliding piston (a metal sphere) oscillating inside a vertical glass tube attached to a bottle of volume V (Fig. 1). Assuming no friction and no leaks between the piston and the tube, the system may be modeled as follows. The gas interacts with the outside only through the piston. If the piston (of mass m) is inserted into the tube at atmospheric pressure P_0, the equilibrium condition is reached in the gravitational field for a pressure P slightly larger than P_0:

$$P = P_0 + mg/A, \tag{2}$$

where A is the neck cross section and g is the gravity acceleration. Let us take as a reference frame a vertical axis x directed upwards with origin in the equilibrium piston position, i.e., where the net force is $F=(P-P_0)A-mg=0$. By displacing the piston of a quantity x from equilibrium, the volume change is

$$\Delta V = xA, \tag{3}$$

and the corresponding force *acting on the piston* is

$$F = A\Delta P. \tag{4}$$

If we consider only small pressure and volume changes we can assume that the transformations are reversible[7] and that the pressure changes ΔP and the volume changes ΔV are related by the differential Poisson equation:

$$dP = -(\gamma P/V)dV. \tag{5}$$

The force F acting on the piston, when its displacement x produces the change dP in the gas pressure, may be written:

$$F = A\,dP = -A(\gamma P/V)dV = -A^2(\gamma P/V)x. \tag{6}$$

This shows that the force is quasielastic ($F=-kx$, with a "spring constant" $k=\gamma A^2 P/V$). The parameter k is not strictly a constant, depending on the ratio P/V, but it may be approximated by a constant if the relative changes dV and dP are small. Free piston oscillations in the tube must therefore be nearly harmonic, obeying the following differential equation:

$$a = \frac{F}{m} = \frac{d^2x}{dt^2} = -\frac{\gamma P A^2}{mV}x = -\omega^2 x, \tag{7}$$

where the angular frequency ω is

$$\omega = 2\pi/\tau = \sqrt{\frac{\gamma P A^2}{mV}} \tag{8}$$

(here τ is the period) and the coefficient γ may be calculated from the four measurable quantities m, A, V_0, P_0, ω (or τ):

$$\gamma = \frac{mV}{A^2 P \omega^2} = \frac{4\pi^2 mV}{A^2 P \tau^2}. \tag{9}$$

Equation (7) predicts a sinusoidal time evolution for the piston displacement, starting from an initial value x_0 and assuming no damping [$x(t)=x_0\sin(\omega t)$], while from Eqs. (3) and (5) we get the corresponding time evolutions for volume [$V(t)=V_0+\Delta V_0\sin(\omega t)$] and pressure [$P(t)=P_0+\Delta P_0\sin(\omega t)$], where V_0, P_0 and $\Delta V_0, \Delta P_0$ are the equilibrium values and the initial changes in volume and pressure, respectively.

Obviously, in a reversible adiabatic transformation the temperature T must also change, and its values may be calculated using the state equation, e.g., by substituting $P=nRT/V$ into the Poisson equation. Temperature and volume along an adiabatic transformation are therefore related by

$$TV^{\gamma-1} = \text{const} \tag{10}$$

and the temperature time evolution for the air sample is $T(t)=T_0+\Delta T_0\sin(\omega t)$, i.e., in phase with pressure and in counterphase with volume, ΔT_0 and ΔP_0 having the same sign, opposite to that of ΔV_0. An evaluation of the expected temperature changes is obtained differentiating relation (10),

$$dT/T = -(\gamma-1)dV/V = (1-1/\gamma)dP/P, \tag{11}$$

which predicts (at room temperature and pressure) temperature changes of the order of 1 K for relative pressure changes of the order of 1%.

Relation (9) describes the Rüchardt method for measuring γ, where only the oscillation period τ for different values of the buffer volume V was measured.

Nowadays, using a MBL system equipped with position, pressure, and temperature sensors, not only can measurements of the oscillation period (and therefore of γ) easily be obtained, but also the nature of the thermodynamic transformations can be investigated by testing the predicted relations between the three variables P, V, T.

III. DATA ACQUISITION SETUP

Our first experimental setup was similar to that devised by Rüchardt, with some important changes: a MBL system[8] and a cylindrical piston with an adjustable mass replacing the oscillating sphere. It was made of a glass tube connected to a buffer volume (a glass bottle) by means of a perforated rubber stopcock, a "T" shaped metal tube to which a barometric sensor was attached. The piston was made of a pair of PTFE cylinders well fitted (with small friction) to the glass tube, and screwed on an iron screw together with some iron washers (used as variable extra mass). The vertical oscillations of the piston were measured by a position sensor (sonar) placed

This article is copyrighted as indicated in the article. Reuse of AAPT content is subject to the terms at: http://scitation.aip.org/termsconditions. Downloaded to IP: 169.230.243.252 On: Sun, 22 Feb 2015 16:52:38

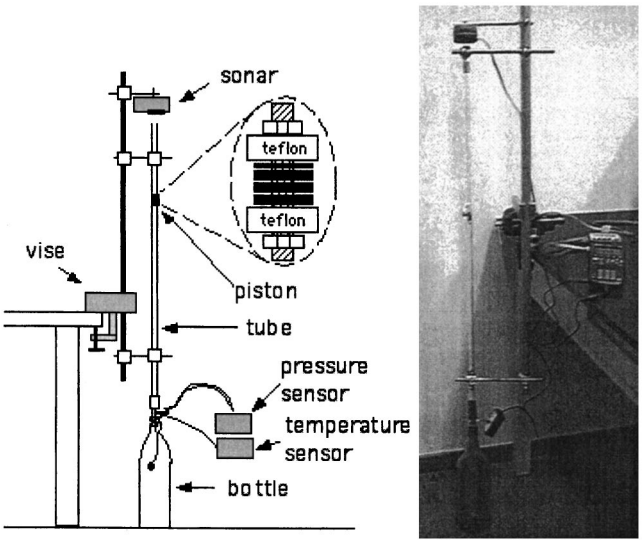

Fig. 2. The first experimental setup.

at the top of the glass tube. The temperature changes were measured by a tungsten filament from a broken lamp[9] read by a simple amplifying circuit (see the Appendix). An advantage over the original Rüchardt design was offered by the use of a variable mass piston allowing different measurements of γ to be obtained with the same buffer volume. The oscillation period was measured by using the ''trace'' mode on any of the pressure, temperature, position versus time plots.[10]

This first experimental setup is sketched in Fig. 2, and an example of the measurements it can provide is shown in Fig. 3. The piston displacements and gas pressure changes are recorded in real time, and the plots are immediately available for the students' analysis. Figure 3, as well as the following ones reporting experimental results, are exact copies of the graphic calculator screen, where the students may use a ''running cross-mark'' to see the coordinates of each point of the displayed curve. The scale of the axes may be deduced from the position of the cross-mark and the shown values of its coordinates. Because perfect sealing is incompatible with low friction between piston and tube, some air always leaks through the plug, and therefore one must hold the piston with an external applied force, for instance, with a strong permanent magnet interacting with the iron screw and washers: When the magnet is displaced from the tube the piston is left free.

This device was able to provide a rather good measurement of γ: In Table I we report some period values measured with a buffer volume $V=(2.1\pm0.02)\,10^{-3}\,\mathrm{m}^3$, a tube diameter $\Phi=(1.1\pm0.02)10^{-2}\,\mathrm{m}$, and different values of the piston mass m. The calculated values of γ, agree within 4% with the expected value for air ($\gamma=1.4$).

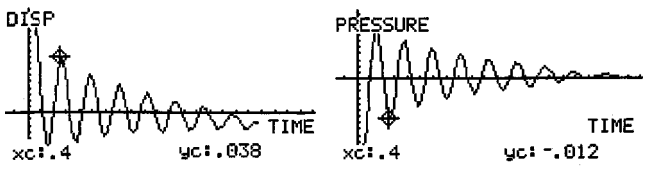

Fig. 3. Piston displacement and pressure change vs time.

Table I. Measured values of period for different values of piston mass.

m (g)	τ (s)	m/τ^2	γ
12.6	0.90	0.0156	1.41
13.5	0.93	0.0155	1.40
14.5	0.95	0.0160	1.45
15.5	1.00	0.0155	1.40
16.7	1.05	0.0151	1.37

However when this low-cost version of the classic Rüchardt apparatus was presented to high-school teachers, we collected comments that led us to design a modified version. In fact, it does not seem to be suitable for classroom experiment. The long and thin glass tube is brittle and it needs a complicated stand-up system; the low-friction leak-tight piston is not easily homemade; moreover complex operations are required for changing the oscillating mass.

Therefore we designed a completely new setup[11] avoiding both the glass tube and the piston by using a ''breast-pump.'' The breast-pump[12] is a device, used to drain human milk from the breast, made of an inner glass tube (with one wider end that is normally pressed against the breast) and an outer glass tube with a closed end that slides outside the inner one, acting as a ''reversed syringe.'' The outer surface of the inner tube is sand-blasted and carefully shaped in order to obtain a leak-tight sealing, still offering low friction. Therefore the outer tube may be well used as the oscillating piston for the Rüchardt experiment.

Figure 4 shows a diagram of this setup: the effective diameter of the piston is now the inner diameter $\Phi=28\,\mathrm{mm}$ of the outer tube, whose mass is 76 g. This may be easily increased by loading it with a suitable mass (we used brass tubes of various length and inner diameter of 30 mm). Also, positioning the sonar above the oscillating piston becomes easier in this setup: We may simply attach it at the edge of a table using the vise shipped with it, because the whole device is much shorter than in the previous version and it may be placed on the ground without any supporting stand.

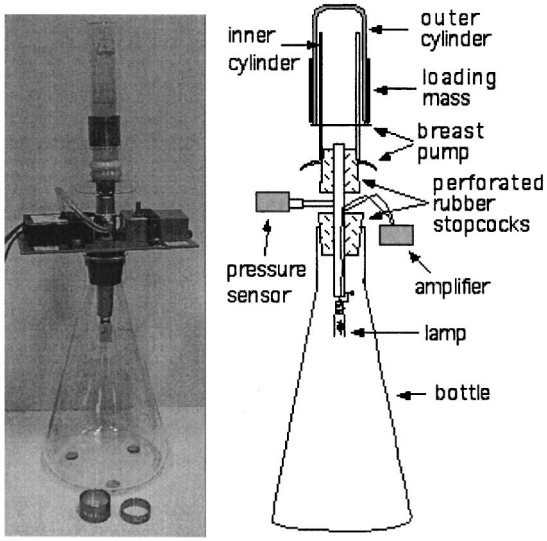

Fig. 4. Experimental setup with breast-pump and details.

This article is copyrighted as indicated in the article. Reuse of AAPT content is subject to the terms at: http://scitation.aip.org/termsconditions. Downloaded to IP: 169.230.243.252 On: Sun, 22 Feb 2015 16:52:38

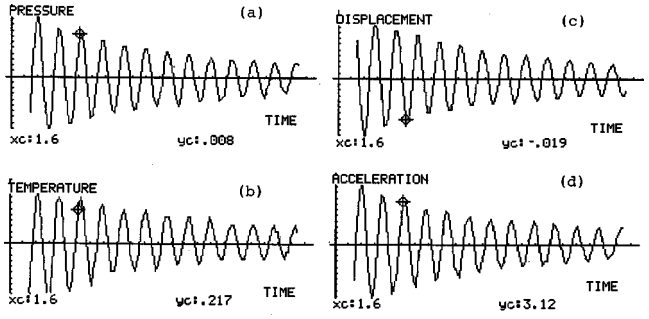

Fig. 5. Time graphs of pressure changes (a) and temperature changes (b) of the gas, and of displacement (c) and acceleration (d) of the piston.

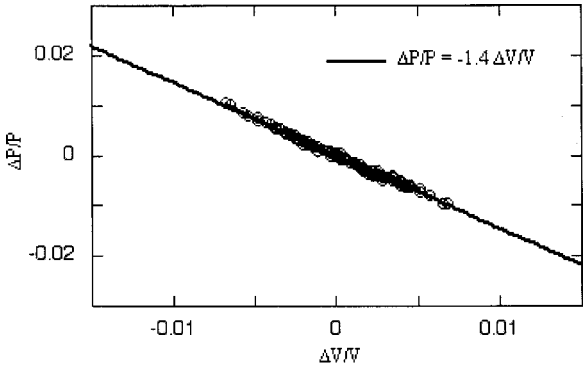

Fig. 7. Relative pressure changes vs relative volume changes.

IV. EXPERIMENTAL RESULTS

A typical set of the experimental results that may be obtained using the second version of our apparatus is shown in Fig. 5. It is worth noting that a larger number of complete oscillations may be recorded, and that the leaking of air is strongly reduced (the piston oscillates around an equilibrium position that drifts much less during the whole experiment). The data shown in Fig. 5 were taken with $V=(2.37\pm0.02)\times10^{-3}\,\mathrm{m}^3$, $m=0.147\,\mathrm{kg}$, and the measured period[13] was $\tau=0.505\pm0.005\,\mathrm{s}$, giving $\gamma=1.39\pm0.05$. Pressure changes are measured in atmospheres, temperature changes in K, and piston displacements in meters. The velocity v and the acceleration a of the piston are automatically computed when using the sonar, as incremental ratios $v_i=(x_{i+1}-x_{i-1})/\Delta t$ and $a_i=(v_{i+1}-v_{i-1})/\Delta t$. This allows the students to draw a plot of the acceleration versus displacement whose slope gives immediately ω^2. This is shown in Fig. 6, where the best fitting line has the slope $-152\pm3\,\mathrm{s}^{-2}$, to be compared with the expected value $-\omega^2=-A^2\gamma P/mV=-154\,\mathrm{s}^{-2}$.

The γ value may alternatively be calculated from Eq. (5) (which may be written as $dP/P=-\gamma dV/V$), i.e., from the slope of the measured relative changes in pressure versus the measured relative changes in volume. This requires some data handling that can be easily performed within the spreadsheet that is built into the graphic calculator. The volume changes are calculated from the measured piston displacements and the known value of the piston cross section $A=\pi\Phi^2/4$. The result of this procedure is shown in Fig. 7, where the slope of the fitting line is -1.4 (for pressure changes up to 0.7% corresponding to volume changes up to 0.5%).

Because in our apparatus the temperature oscillations are also measured, a third value of γ may be calculated using Eq. (11): $dT/T=-(\gamma-1)dV/V$. The slope of the curve in the dT/T vs dV/V plot in Fig. 8 is -0.18, corresponding to the smaller value $\gamma=1.18$. This result might be interpreted as a proof of nonadiabaticity of the transformation, because the measured temperature changes are smaller than the predicted values, suggesting strong heat transfer to the vessel walls. But if we observe that the data in Fig. 8 lie on an ellipse, we deduce that the measured temperature signal suffers a phase lag with respect to the measured volume signal. This is due to the finite heat capacity of the lamp filament, which acts as a low-pass filter for the signal induced by the temperature changes of the surrounding gas.

The measured temperature changes are about half of those predicted by Eq. (11). Therefore temperature measurements are here intrinsically unable to answer the question as to *how much* the transformation departs from an *ideal adiabatic* process.[14] They can only prove that we are *far from an isothermal regime*. But temperature measurements may still offer an interesting consideration in this experiment, as explained in the following section.

V. DISCUSSION OF THE EDUCATIONAL VALUE OF THE EXPERIMENT

The use of MBL in this experiment introduces some advantages for the introductory-level laboratory course. In fact the students who are not advanced in calculus might find it difficult to derive Eq. (5) from Eq. (1). These students may then use the data stored in the graphic calculator to obtain a

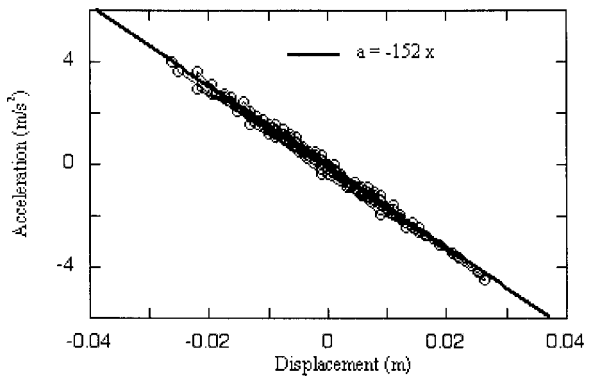

Fig. 6. Piston acceleration vs displacement from equilibrium position.

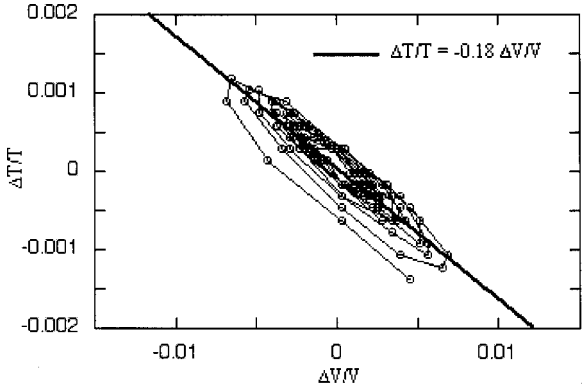

Fig. 8. Relative temperature changes vs relative volume changes.

This article is copyrighted as indicated in the article. Reuse of AAPT content is subject to the terms at: http://scitation.aip.org/termsconditions. Downloaded to IP: 169.230.243.252 On: Sun, 22 Feb 2015 16:52:38

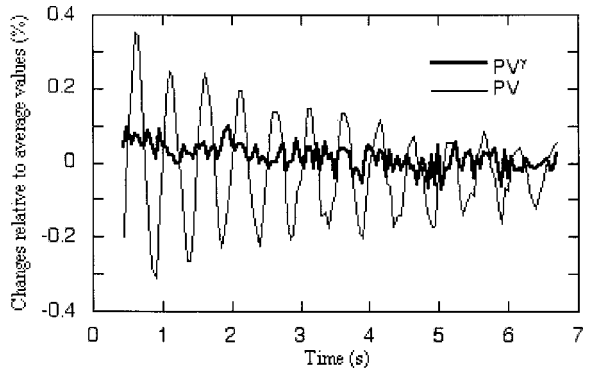

Fig. 9. Time graphs of the relative changes of PV (line) and PV^{γ} (crosses).

time graph of the product PV and of the product PV^{γ} versus time, in order to investigate the nature of the gas transformation (Fig. 9). We calculated values of the *relative changes* of these products with respect to their average values (i.e., $PV/\langle PV\rangle - 1$ and $PV^{\gamma}/\langle PV^{\gamma}\rangle - 1$) to make the comparison easier. The product PV shows large oscillations, while the product PV^{γ} remains substantially constant, proving that the Poisson equation (1) is more appropriate than the isothermal equation for describing the observed transformation.

An equivalent procedure that also does not require differential calculus is the power-law best fit of the pressure versus volume data, that gives for the exponent the γ value. Figure 10 shows the fitting line and the experimental data plotted on two different scales: the first one expanded in order to check the goodness of fit, the second one zoomed-out to include the origin. These plots clearly show how small is the region in the $P-V$ plane that is covered by the adiabatic transformation. The usual plots in the textbooks in fact show much wider regions, corresponding to larger relative changes in pressure and volume. But it is clear that in the real world one cannot perform *reversible* and *adiabatic* transformations involving such large relative changes, because one must choose between *fast* quasiadiabatic, or *slow quasi* reversible processes. The two together cannot be achieved with good approximation.

The results of the Rüchardt experiment may also be discussed as an example of direct conversion of mechanical work into internal energy.

From the values of specific heat ($C_v \approx 1$ J/g) and density ($\rho \approx 1.3\times 10^{-3}$ g/cm^3) of air, found in the textbooks, the students may estimate the change ΔE of the internal energy of a volume V of air corresponding to a temperature change ΔT:

$$\Delta E = \rho V C_v \Delta T. \tag{12}$$

This change may then be compared with the potential energy changes (gravitational $\Delta U_g = mg\Delta x$ or elastic $\Delta U_e = k\Delta x^2/2$) of the system made of the piston and the "air spring" with elastic constant $k = \mathrm{A}^2(\gamma P/V)$. The result ($\Delta E \gg \Delta U_g$) is usually surprising for the students, who find it difficult to explain where this extra energy comes from. This is obviously due to taking into account only the subsystem made of the piston and the "air-spring." The teacher may use this common misunderstanding to discuss the important difference between closed and open systems. In the open system made of the piston and the "air-spring," the total energy is not conserved. In fact if the piston starts from rest, mechanical energy conservation must give for the maximum elongation Δx, where the piston has zero velocity:

$$\Delta U_g = mg\Delta x = \Delta U_e = \int kx\, dx = A^2(\gamma P/2V)\Delta x^2. \tag{13}$$

Equation (13) was indeed first used by Rinkel[15] to measure the ratio of specific heats as $\gamma = 2mgV/(A^2 P\Delta x)$. The choice of the maximum elongation simplifies the calculation, because for a generic value of the displacement one should also take into account the kinetic energy $E_c = 1/2mv^2$ of the piston.

However, to explain the "extra energy" transferred to the air corresponding to the increased temperature during a compression, one must take into account the whole system piston-air (including the air above the piston at atmospheric pressure P_0). In the whole system, the energy change must be equal to the total work done on the air volume enclosed in the reservoir. Here the work is not simply the work performed by the *net* force $F = mg - kx$ applied to the piston. This in fact should be exactly zero, as in any vertical mass-spring oscillator when damping can be neglected, because the increase of elastic energy compensates the decrease of gravitational energy. For example, with the data of Fig. 5, the students would calculate, for a full oscillation (displacement ± 2 cm), a temperature rise $\Delta T \approx 0.5$ K, corresponding, for the 2.37 g of air contained in the volume V, to an energy increase $\Delta E = \rho V C_v \Delta T \approx 1.3$ J On the other hand the potential energy terms are much smaller. For example, with $m = 147$ g, and a total displacement $\Delta x \approx 4$ cm, we get $\Delta U_g = -\Delta U_e \approx -0.06$ J, which is 20 times smaller than the calculated ΔE. Moreover, if we calculate the total work by taking into account the *total* gravitational force, which includes that due to the mass of the air column above the piston, i.e., $F = AP_0 + mg$, we obtain $W = F\Delta x = (P_0 A + mg)\Delta x \approx 2.5$ J, which is about twice the value of the calculated increase of the internal energy ΔE. If we assume that the total energy must be conserved, we deduce that the measured temperature changes must be about a factor of 2 smaller than the real ones (see the discussion about Fig. 8). With this assumption the slope in the plot of Fig. 8 should change to -0.36, which gives from Eq. (11) the value $\gamma = 1.36$, which differs only 4% from the theoretical value.

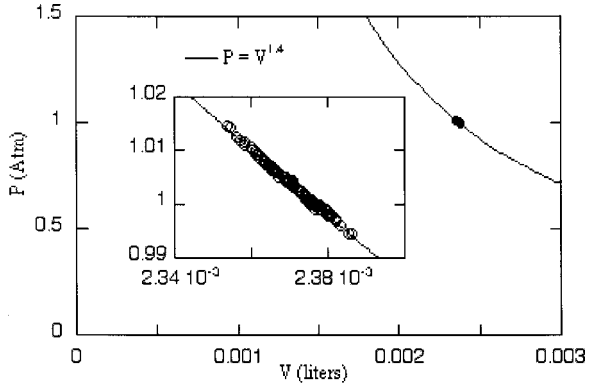

Fig. 10. Plot of pressure vs volume; best fitting curve: $P = 0.000\,21\ \mathrm{V}^{-1.4}$.

This article is copyrighted as indicated in the article. Reuse of AAPT content is subject to the terms at: http://scitation.aip.org/termsconditions. Downloaded to IP: 169.230.243.252 On: Sun, 22 Feb 2015 16:52:38

VI. CONCLUSIONS

We have shown that with a simple and cheap apparatus one may perform an interesting thermodynamic experiment to illustrate the quasiadiabatic transformation of a mass of gas, which usually requires very skilled operators and/or very expensive and fragile apparatuses. An interesting aspect of this experimental setup is the use of a fast and sensitive thermometer to measure the gas temperature oscillations that are made possible by a system where energy exchange between the working gas and the ambient is substantially inhibited. By using volume, pressure, and temperature sensors, the system is completely characterized by the measured time evolution of all three thermodynamic variables. This allows a detailed discussion of various aspects of the transformation to be carried out. The description of the phenomenon as a function of time may be enlightening for students who have difficulties in building a description in terms of state equations (time invariant), such as those typical of thermostatics found in textbooks, and the features of the experiment may be usefully exploited for discussing the energy balance in a system whose description involves both mechanical and thermodynamical quantities.

APPENDIX

1. The pressure sensor calibration

The Vernier barometric sensor (BAR-DIN) can easily measure pressure changes of the order of 10^{-2} atm, and it is fairly linear. Therefore it may be calibrated as follows. We connect a known volume (500-cm^3 bottle) to the probe and to a graduated syringe by means of the threefold valve supplied with the probe. We seal the air volume in the bottle and syringe at room pressure, with the syringe piston halfway; then we measure the pressure reached after decreasing the volume by a known amount (e.g., $\Delta V=-10\,\mathrm{cm}^3$, corresponding to $P=1.02$ atm), and then by increasing the volume (e.g., $\Delta V=+10\,\mathrm{cm}^3$, corresponding to $P=0.98$ atm). This calibration procedure is normally well understood by students who have previously performed the isothermal experiment to test Boyle's law, with a calibrated Vernier pressure probe (PS-DIN).

2. The volumetric sensor

The changes of the air volume sealed by the sliding piston are indirectly measured by the piston displacements from its equilibrium position, which are detected by the position sensor (sonar, MD-CBL whose sensibility is about 1 mm) placed just above the glass tube. Calibration is simply obtained by measuring the inner diameter of the outer cylinder.

3. The temperature sensor

Commercial thermoresistive sensors or thermistors cannot be used to measure gas temperature changes of the order of 1 K at fast acquisition rates (20 Hz): Their surface to volume ratio is too low to achieve reliable quick measurements. We therefore used a homemade sensor made of a tungsten filament from a (7-W, 220-V) lamp, whose glass bulb was perforated. At room temperature the filament resistance R is about 500 Ω, and the tungsten thermal coefficient is $\alpha=(dR/R)/dT\approx 0.005\,\mathrm{K}^{-1}$. This requires the use of a bridge configuration to make detectable the small resistance changes produced by small-amplitude temperature oscillations ($\Delta T<1$ K). We therefore inserted the filament F (Fig. 11) into a Wheatstone bridge, powered by the CBL through the operational amplifier IC1a, whose inputs are blocked at 2.5 V by the Voltage Reference IC2. The bridge output signal, preamplified by IC1b with gain $G=101$, is fed to the analog input port of CBL. The filament is biased by a constant current of 0.76 mA through the resistor R_0 (3.3 kΩ). The thermometer sensitivity is $dV/dT=G\alpha IR\approx 0.19$ V/K, with a temperature resolution (given by the 5 mV voltage resolution of the interface ADC converter) better than 0.03 K.

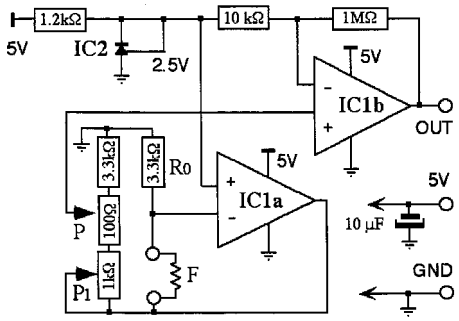

Fig. 11. Diagram of the sensor circuitry: IC1a=IC1b=(1/2)LT1013, IC2=TL431.

The 1-kΩ potentiometer P1 allows one to perform a rough bridge balance, which depends on the exact resistance value of the filament used and the 100-Ω potentiometer P may be used for a fine adjustment of the output voltage V_0, which depends on the room temperature T_0 (e.g., setting $V_0=2.5$ V, the midpoint of the 0–5 V range). The sensor calibration is therefore provided by the equation: $T-T_0=(V-V_0)/G\alpha IR\approx 5.3(V-2.5)$ K.

[a]Electronic mail: torzo@padova.infm.it

[1]N. Grimellini Tomasini, B. Pecori Balandi, J. L. A. Pacca, and A. Villani, "Understanding conservation laws in mechanics: Students' difficulties in learning about collisions," Sci. Educ. **77** (2), 169–189 (1993).

[2]E. Rüchardt, "Eine Einfache Methode zur Bestimmung von C_p/C_v," Phys. Z. **30**, 58–59 (1929).

[3]See, for example, M. W. Zemansky, *Heat and Thermodynamics* (McGraw–Hill, New York, 1957), Chap. 5, where the method of Katz–Woods–Leverton to account for the departures from ideal adiabatic process is also mentioned.

[4]O. L. de Lange and J. Pierrus, "Measurement of bulk moduli and ratio of specific heats of gases using Rüchardt's experiment," Am. J. Phys. **68**, 265–270 (2000).

[5]G. D. Severn and T. Steffensen, "A simple extension of Rüchardt's method for measuring the ratio of specific heats of air using microcomputer-based laboratory sensors," Am. J. Phys. **69**, 387–389 (2001).

[6]A reversible thermodynamic transformation is an ideal process that goes through equilibrium states, and therefore the time derivatives of volume and pressure must be small. This may be approximated with phenomena involving large changes of P and V by proceeding slowly or with fast phenomena by involving small P and V changes.

[7]This assumption is justified for oscillations with relative pressure and volume changes of a few percent, for frequencies up to a few Hz.

[8]We used a TI-89 hand-held graphic calculator and the CBL interface produced by Texas Instruments, with barometric probe BAR-DIN and Motion Detector, MD-CBL, produced by Vernier Software, Portland, OR.

[9]G. De Bernardis, M. De Paz, M. Pilo, and G. Sonnino, "Thermodynamic experiments on gases with a computer on-line," Phys. Educ. **24**, 222–229 (1994).

[10]Values measured for the period τ should be corrected for the damping effect, e.g., assuming a viscous drag, $\tau\approx\tau_{\mathrm{mis}}\{1-(\lambda/\pi)^2\}$, where λ is the logarithmic decrement of the oscillation amplitude, or $\tau\approx\tau_{\mathrm{mis}}\{1-(\tau/2\pi\tau_0)^2\}$, where τ_0 is the oscillation decay time. In our case this

This article is copyrighted as indicated in the article. Reuse of AAPT content is subject to the terms at: http://scitation.aip.org/termsconditions. Downloaded to IP: 169.230.243.252 On: Sun, 22 Feb 2015 16:52:38

effect is negligible [with $\tau \approx 1$ s and $\tau_0 \approx 3$ s, we get $(\tau/2\pi\tau_0)^2 \approx 0.3\%$].

[11]This apparatus was patented and is now produced by MAD, Italy (grolive@tin.it).

[12]We used a model produced by Chicco®, Italy.

[13]The period was measured by selecting, on the graphic calculator screen displaying the distance versus time plot, the coordinates of maximum or minimum elongation. The half-period was then derived as the mean value of the selected time intervals.

[14]Purely adiabatic transformations are not physically achievable because thermal coupling of the gas with the vessel walls is always present. Even if they were achievable, it would not be possible to measure the temperature in a transformation which is strictly adiabatic: Some energy in fact must be transferred to or drained from the system to obtain a measurement of its temperature. Therefore the definition ''adiabatic'' for a real process should always be taken as meaning ''approximately adiabatic.''

[15]R. Rinkel, ''Die Bestimmung von C_p/C_v,'' Phys. Z. **30**, 805 (1929).

THE MYSTERY OF COMPLEX NUMBERS

''Yes, yes, I know all that just as well as you do. But isn't there still something very odd indeed about the whole thing? I don't quite know how to put it. Look, think of it like this: in a calculation like that you begin with ordinary solid numbers, representing measures of length or weight or something else that's quite tangible at any rate, they're real numbers. And at the end you have real numbers. But these two lots of real numbers are connected by something that simply doesn't exist. Isn't that like a bridge where the piles are there only at the beginning and at the end, with none in the middle, and yet one crosses it just as surely and safely as if the whole of it were there? That sort of operation makes me feel a bit giddy, as if it led part of the way God knows where. But what I really feel is so uncanny is the force that lies in a problem like that, which keeps such a firm hold on you that in the end you land safely on the other side.''

Spoken by Törless in Robert Musil, *Young Törless* (The New American Library of World Literature, Inc., New York, NY, 1964), p. 90.

This article is copyrighted as indicated in the article. Reuse of AAPT content is subject to the terms at: http://scitation.aip.org/termsconditions. Downloaded to IP: 169.230.243.252 On: Sun, 22 Feb 2015 16:52:38